MinSU Water Treatment Process

<table>
<tr>
<td>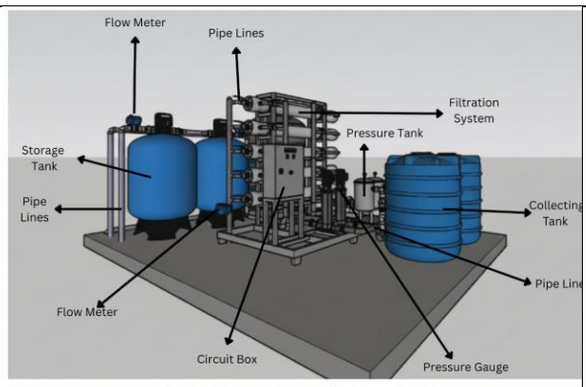

Tentative Drawing of Rainwater Harvester System</td>
<td>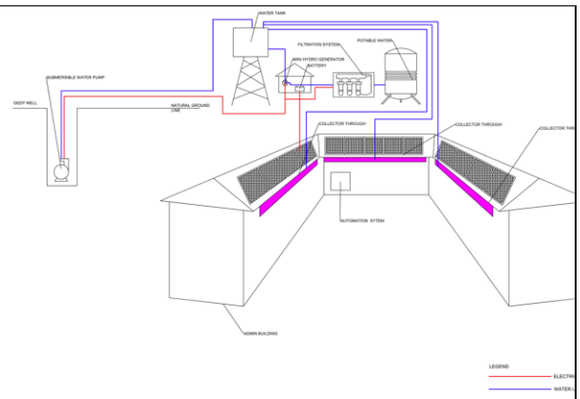</td>
</tr>
<tr>
<td>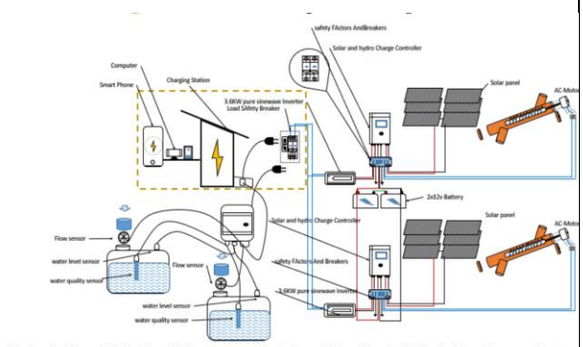
Design of a Solar and Hydro-Based Rainwater Harvesting System with Free Charging Station for Smartphones and Laptop</td>
<td>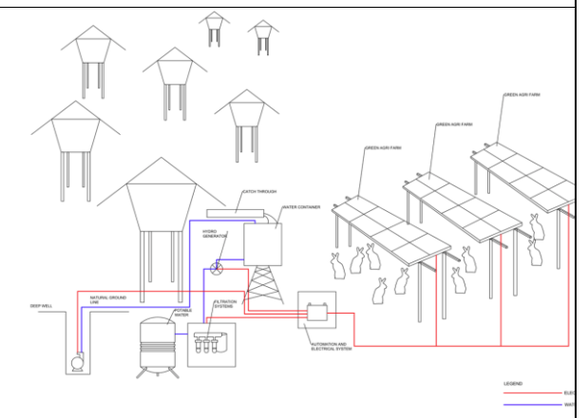</td>
</tr>
<tr>
<td>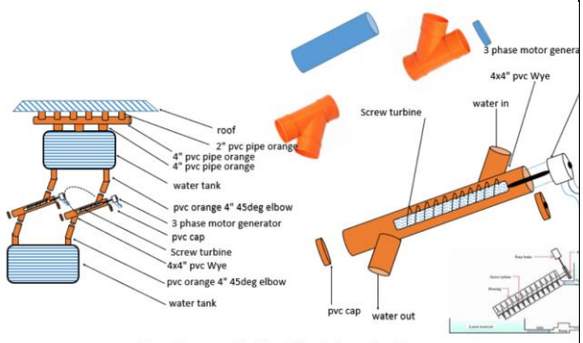

Water Harvester with Micro Electric Generating Structure</td>
<td>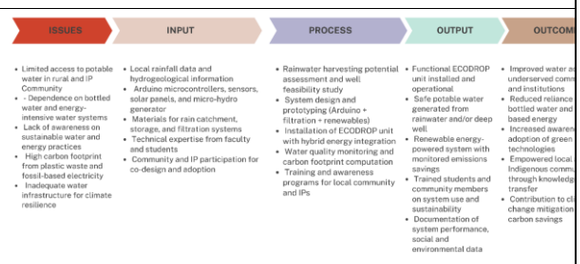

Figure 1: Conceptual Framework of the Project</td>
</tr>
<tr>
<td>Water recycling program implementation

(1. Project HyDroGreen (Harnessing Yield-Driven Rainwater Optimization for a Green Resilient, Efficient, and Eco-Friendly Network)</td>
<td>Water recycling program implementation

2. Project ECODROP: Eco-friendly Collection and Optimization of Drainage (Rainwater) with Automated System for Reliable On-Demand Potable Water</td>
</tr>
<tr>
<td colspan="2">Example of Water Recycling Program from

Project HydroGreen and Project Ecodrop (Mindoro State University)</td>
</tr>
</table>

Description:

1. **Project HyDroGreen (Harnessing Yield-Driven Rainwater Optimization for a Green Resilient, Efficient, and Eco-Friendly Network)**

Water Recycling Implementation

Project HyDroGreen centers on the Arduino-based Rainwater Harvester System, designed to collect, store, and reuse rainwater primarily for non-potable purposes such as cleaning, irrigation, and sanitation, while also producing micro-hydropower electricity.

Process Flow

1. **Collection System** – Rainwater is captured from **rooftops or other impervious surfaces**.
2. **Conveyance System** – PVC pipes and downspouts deliver the water to storage while filtering out large debris.
3. **Storage System** – Water is kept in a **sealed storage tank** for treatment and later use.
4. **Filtration & Treatment System** – Multi-layer filtration includes:
    - **Sediment filtration** (gravel, sand, and fiber layers)
    - **Activated carbon** (removes odor, taste, and chemical impurities)
    - **Optional UV treatment** for microbial reduction (based on the Arduino sensor triggers)
5. **Automation** – The system uses **Arduino microcontrollers** and **water quality sensors** to monitor **pH, temperature, turbidity**, and regulate water flow and filtration activation.
6. **Power Generation** – A **micro-scale hydroelectric generator** converts the kinetic energy from falling rainwater into electrical energy for system operation and backup power (e.g., charging devices during outages).

Equipment Specifications

- **Arduino Microcontroller Unit (MCU)** – Controls water flow, filtration sequence, and monitors sensor data.
- **Water Quality Sensors** – Measures temperature, pH, and turbidity for automated operation.
- **Micro-hydroelectric Generator** – Generates renewable electricity (secondary/emergency use).
- **Filtration Unit** – Multi-media filter system using sand, gravel, and carbon.
- **Storage Tank** – Durable, food-grade polyethylene container.
- **Mobile Application** – Enables remote data monitoring, system control, and diagnostics.

2. Project ECODROP (Eco-friendly Collection and Optimization of Drainage (Rainwater) with Automated System for Reliable On-Demand Potable Water)

Water Recycling Implementation

Project ECODROP introduces a hybrid water recycling system that combines rainwater harvesting, deep-well supplementation, and multi-stage purification to produce potable drinking water while simultaneously generating renewable power via solar and micro-hydro systems.

System Process Flow

1. **Collection and Conveyance**
    - Rainwater is collected from roof catchments using PVC/aluminum gutters and first-flush diverters to remove initial contaminants.
    - Conveyance system directs water to pre-filtration boxes with sand-gravel mesh filters.
2. **Storage**
    - 8,000-liter food-grade polyethylene tanks serve as main reservoirs, mounted on reinforced concrete slabs for stability.
3. **Filtration and Purification**
    - Pre-filtration: 5-micron sediment and carbon filters remove solids, odor, and organic matter.
    - Reverse Osmosis (RO) Unit: Provides fine purification (80–100 GPD capacity).
    - High-Pressure Pump: Maintains flow through the RO membrane.
    - Post-filtration: 5-micron polishing filter ensures final water clarity.
    - UV Sterilization (optional): Kills residual microorganisms post-RO, ensuring potable-grade output.
4. **Automation and Monitoring**
    - PLC/SCADA-based control panel automates pump scheduling, filtration switching, and source alternation (rainwater vs. deep well).
    - Sensors: Ultrasonic water-level sensors, pressure sensors, and flow meters.
    - Data Logging: Remote data transmission and mobile monitoring via Wi-Fi/GSM modules.
5. **Energy Integration**
    - Micro-hydro Generator (100–500W): Harnesses gravity-fed flow for power generation.
    - Solar Backup System: 300–500W solar panels with MPPT charge controller, inverter, and lithium-ion battery storage for off-grid operation.
6. **Water Quality Testing**
    - Tests for physical, chemical, and microbiological parameters (pH, TDS, nitrates, heavy metals, E. coli).
    - Compliance with Philippine National Standards for Drinking Water (PNSDW) ensured through regular testing cycles.